0.1%–0.5% ACCURACY | 20A–3,000A RANGE | IEC 60044-1 | SOLID & SPLIT CORE

View SATEC's High Accuracy Current Sensors (HACS) on satec-global.com.au ↗

HACS

High Accuracy Current Sensors for SATEC Power Meters and Power Quality Analysers

The HACS range is SATEC's family of high accuracy current sensors for use with SATEC's EM132, EM133, PM130EH, PM135EH, BFM136, BFM II, PM180 and PRO Series family of metering and power quality devices, extending overall system accuracy to Class 1.0 or better. The range spans 17 models from 20A to 3,000A, in solid-core and split-core formats, so installers can match the sensor to the busbar or conductor without disturbing existing wiring.



Every HACS sensor is built to IEC 60044-1 with UL-approved materials and a built-in automatic shorting diode protection circuit, at customer's choice, eliminating the need for CT shorting links or blocks.* A standard 2.5m lead is supplied with each unit and can be extended up to 200m from the meter using shielded 1.5mm² cable, making HACS well suited to retrofit installations where direct access to the load is restricted.

Main Features

Highlights

- 17 models covering 20A to 3,000A nominal current
- Accuracy classes from 0.1% to 0.5%
- Solid-core and split-core options for new-build or retrofit installation
- Built-in automatic shorting diode protection — shorting CT links/bars are not required
- All materials UL approved; compliant with IEC 60044-1
- Standard 2.5m lead, extendable up to 200m using shielded 1.5mm² cable

Applications

- Retrofit metering where direct load access is restricted
- Revenue and sub-metering with SATEC EM132, EM133, PM130EH, PM135EH, BFM136 and BFM II
- Power quality and energy monitoring with SATEC PM180 and the PRO Series family
- Switchboard and busbar current sensing
- Extending overall system accuracy to Class 1.0 or better

* See Installation Recommendations on page 3.

Specification subject to change without notice. © 2026 SATEC (Australia) Pty Ltd. | sales@satec-global.com.au

Model Range

All 17 HACS models share the same technical specifications and installation requirements (see the following page) and differ only in current rating, window size, core type and accuracy, as summarised below.

PHOTO	MODEL	CATALOG NO.	MAX CURRENT	WINDOW	CORE	ACCURACY	WEIGHT
	**CS05S / RS5**	HX0140	20A	ø16mm (ø0.62″)	Split	0.5%	98.2g (0.22 lb)
	**CS1**	EL0072	100A	ø12mm (ø0.47″)	Solid	0.1%	156.4g (0.34 lb)
	**CS1L**	EL0115	100A	ø23mm (ø0.9″)	Solid	0.1%	206.3g (0.45 lb)
	**CS1S**	HX0118	100A	ø16mm (ø0.63″)	Split	0.5%	103.4g (0.23 lb)
	**CS1H**	HX0161	100A	ø13mm (ø0.5″)	Split	0.1/0.2%	280g (0.6 lb)
	**CS2**	EL0142	200A	ø23mm (ø0.9″)	Solid	0.1%	206.3g (0.45 lb)
	**CS2S**	HX0145	200A	25×23mm (0.96×0.9″)	Split	0.5%	160g (0.34 lb)
	**CS2SL**	HX0156	200A	43×33mm (1.69×1.3″)	Split	0.5%	450g (1 lb)
	**CS250S**	HX0166	250A	24×25mm (0.94×0.98″)	Split	0.5%	210g (0.46 lb)
	**CS4**	EL0117	400A	ø26mm (ø1.02″)	Solid	0.1%	214g (0.47 lb)
	**CS4S**	HX0157	400A	43×33mm (1.69×1.3″)	Split	0.5%	450g (1 lb)
	**CS4L**	EL0153	400A	ø45mm (ø1.77″)	Solid	0.1%	300g (0.66 lb)
	**CS8**	EL0125	800A	100×32/62mm (4×1.28/2.44″)	Solid	0.1%	525g (1.16 lb)
	**CS8S**	HX0158	800A	80×50mm (3.1×1.9″)	Split	0.5%	900g (1.9 lb)
	**CS12S**	HX0153	1,200A	120×80mm (4.7×3.1″)	Split	0.5%	1.25kg (2.75 lb)
	**CS20S**	HX0154	2,000A	160×80mm (6.3×3.15″)	Split	0.5%	4.3kg (9.4 lb)
	**CS30S**	HX0155	3,000A	160×80mm (6.3×3.15″)	Split	0.5%	4.3kg (9.4 lb)

Technical Specifications

SHARED SPECIFICATIONS (ALL MODELS)	
Frequency	50/60Hz
Lead insulation	600V AC
Core insulation	4,000V AC
Nominal current	50% of maximum current
Lead length	2.5m / 8.2ft (UL1015)
Operating temperature	–40°C to +70°C (–40°F to 158°F)
Storage temperature	–40°C to +85°C (–40°F to 185°F)
Material	All materials are UL approved
Standard	IEC 60044-1
Burden	0.2 VA
Thermal over current limit	$40\times I_{MAX}$ for 1 second
Short circuit over current	$80\times I_{MAX}$ for 10ms

Installation Recommendations

- All HACS incorporate a built-in automatic shorting diode protection circuit for maximum safety; shorting CT links/bars are not required.
- Future provision for testing circuits may require installation of shorting CT links/bars.*
- Do not earth/ground the HACS output — doing so may cause damage to the HACS input meter.
- All HACS are supplied with a 2.5m / 8.2ft cable.
- Maximum cable length: can be wired up to 200m / 650ft from SATEC HACS input metering devices.
- Recommended wire gauge: ≥1.5mm² diameter cable.
- Use a shielded extension cable between the HACS and the SATEC meter, with the cable shield connected to the SATEC meter ground.
- Locate HACS cable in a separate cable conduit, at least 1m (3ft) away from high-voltage circuits and/or other high-power magnetic fields.

CT Dimensions

CS05S / RS5 (HX0140)

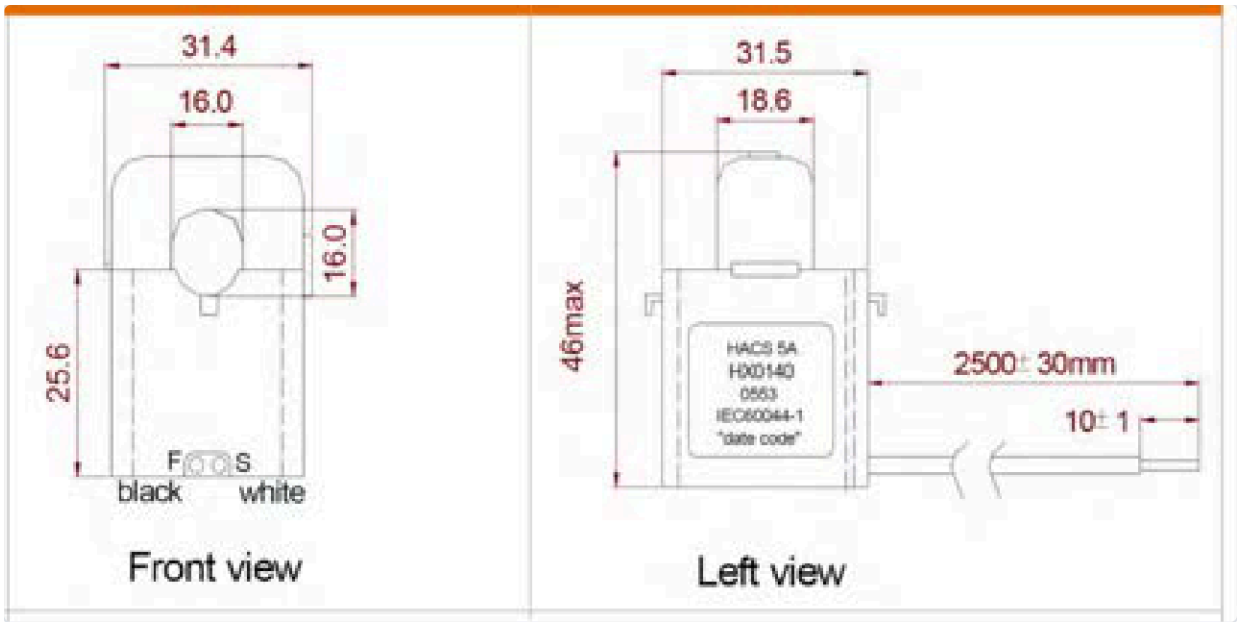

CS1 (EL0072)

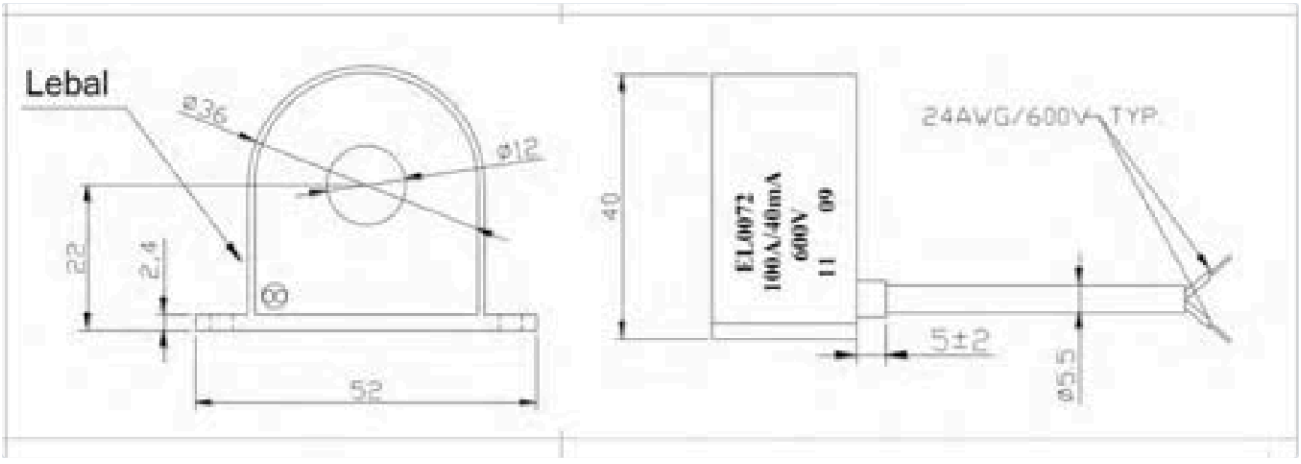

CT Dimensions (continued)

CS1L (EL0115)

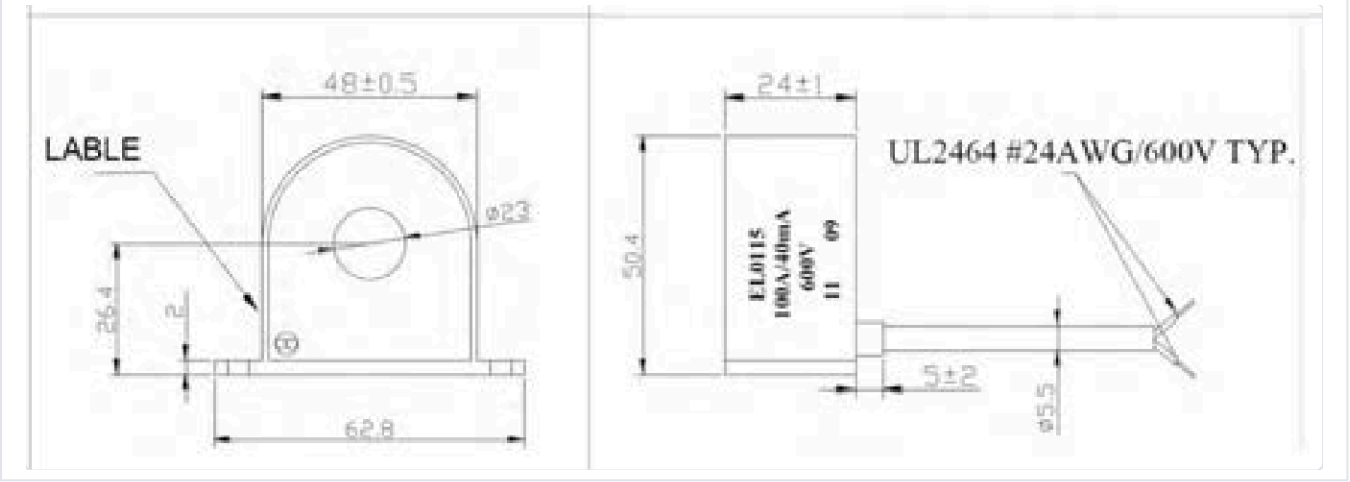

CS4 (EL0117)

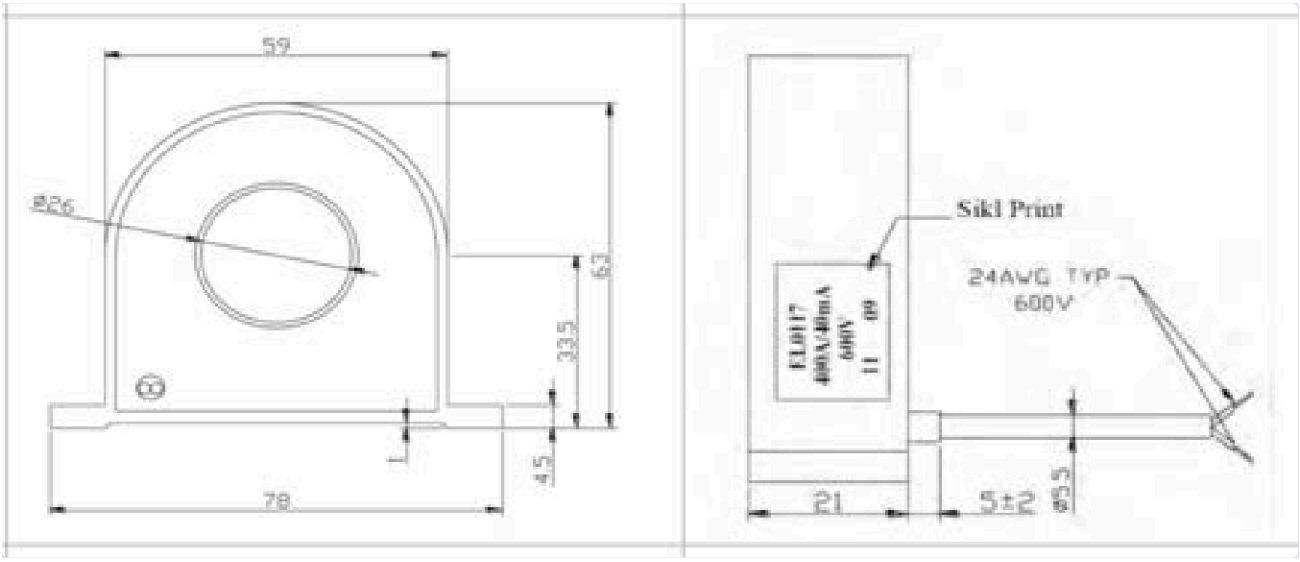

CT Dimensions (continued)

CS1S (HX0118)

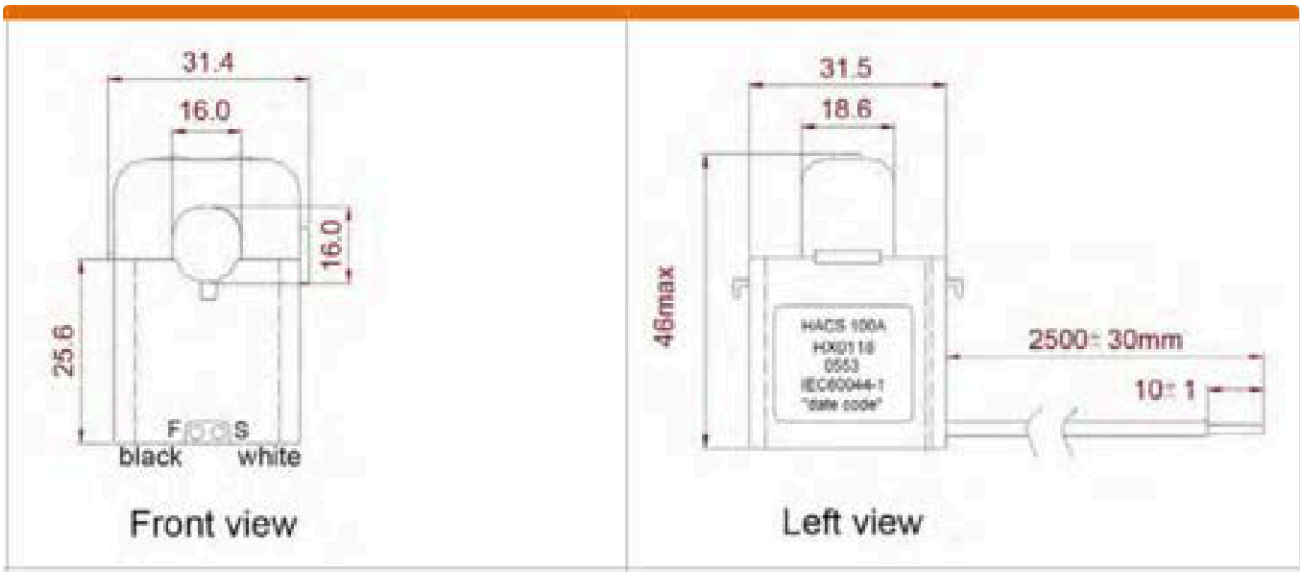

CS1H (HX0161)

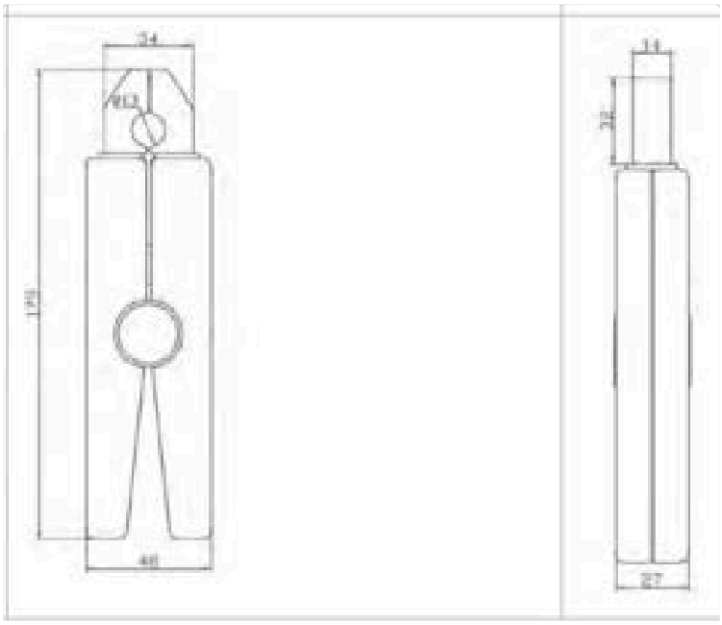

CT Dimensions (continued)

CS2 (EL0142)

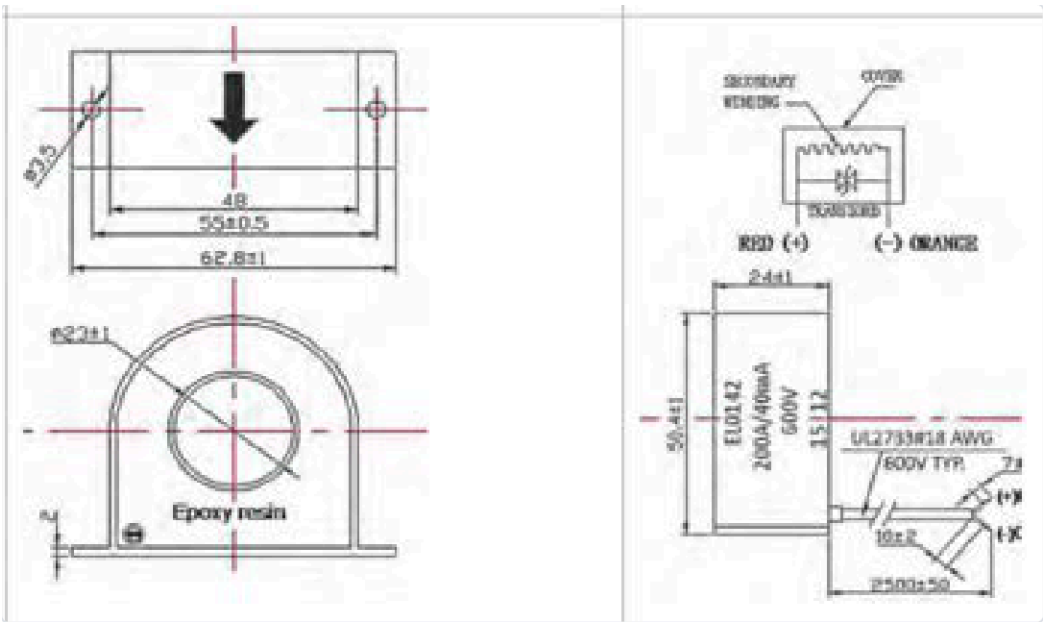

CS250S (HX0166)

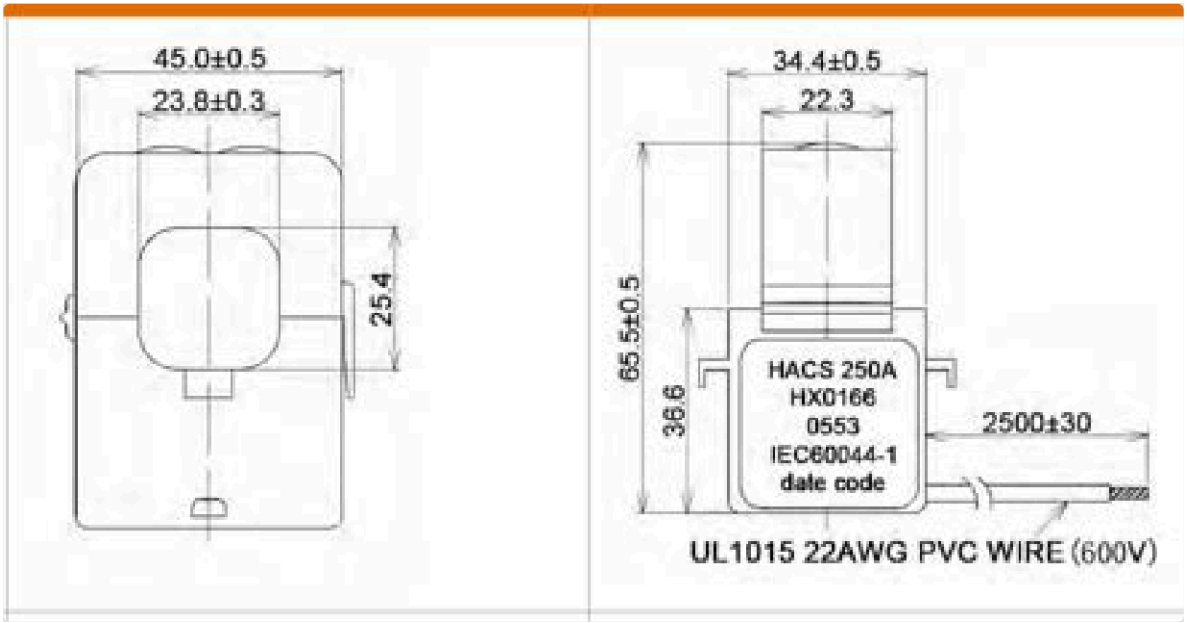

CT Dimensions (continued)

CS2S (HX0145)

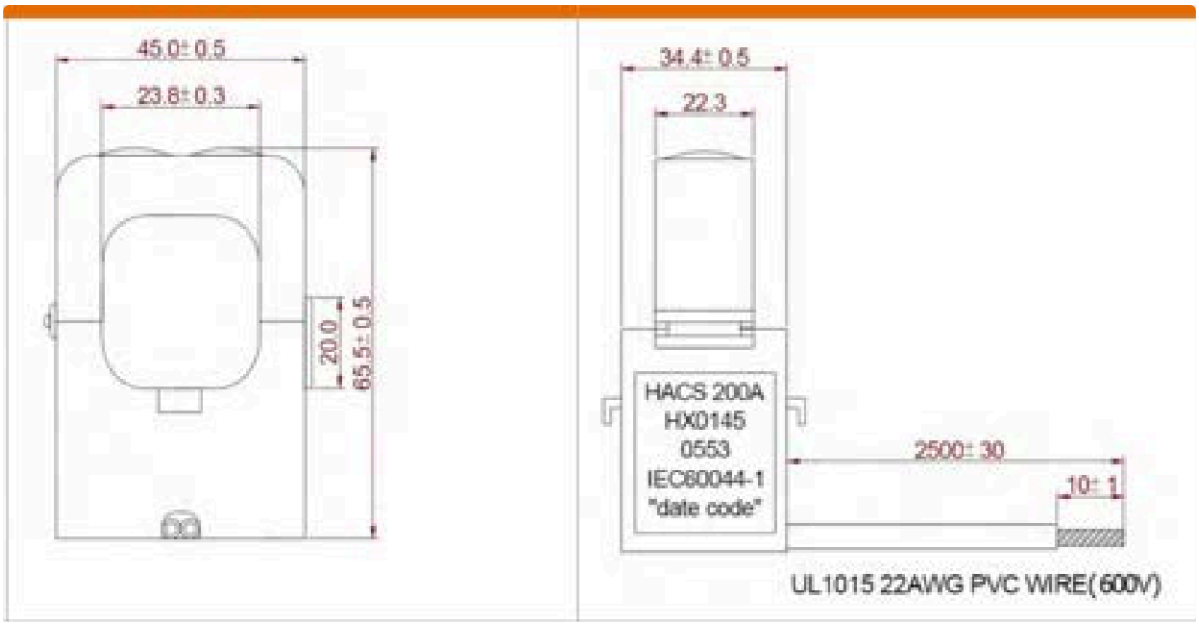

CS8 (EL0125)

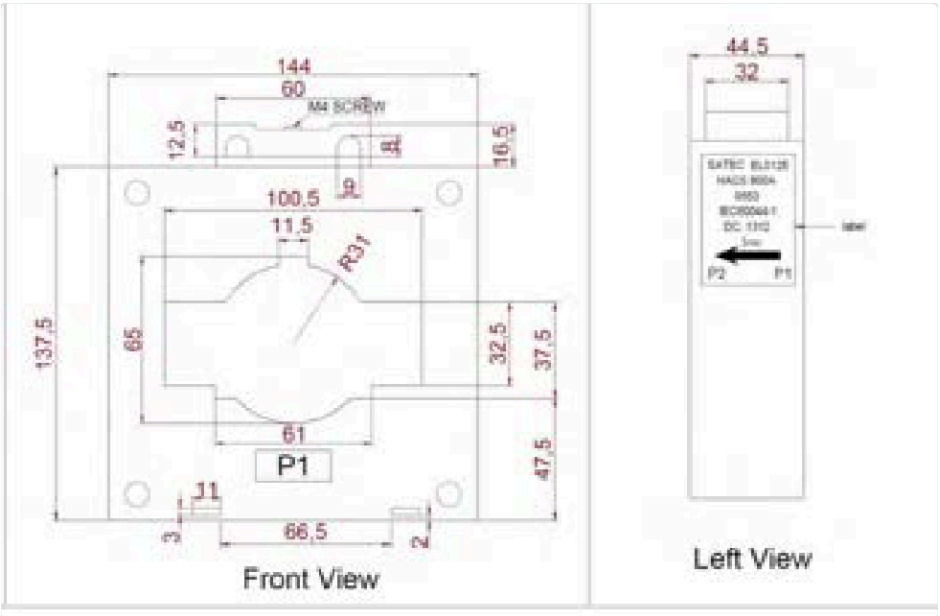

CT Dimensions (continued)

CS2SL (HX0156)

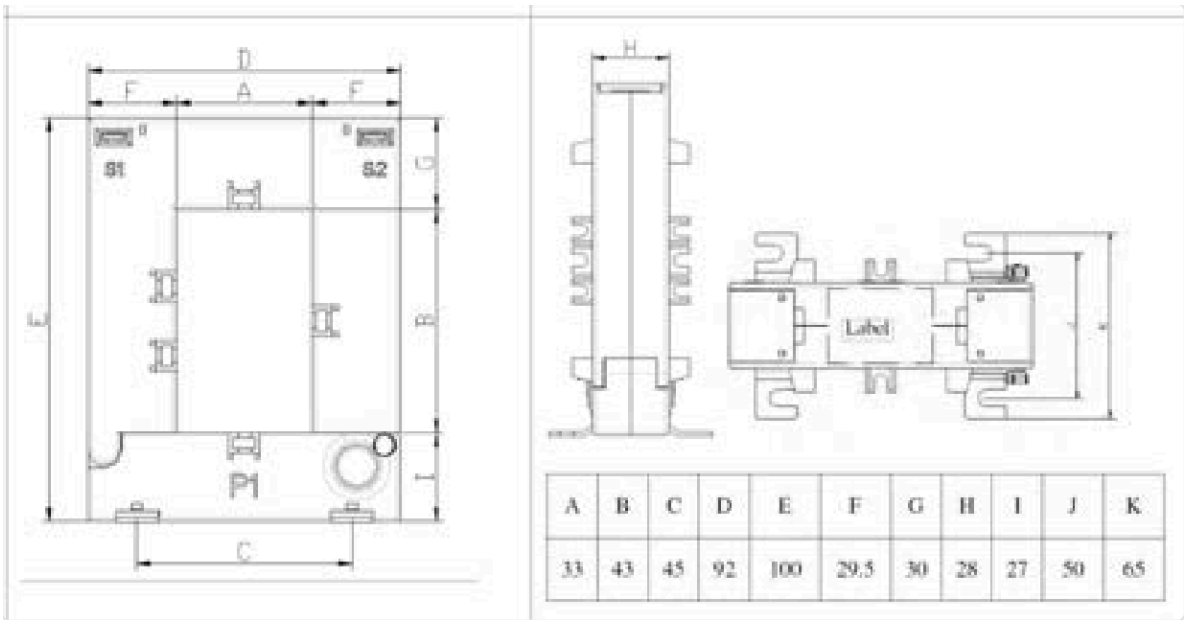

A	B	C	D	E	F	G	H	I	J	K
33	43	45	92	100	29.5	30	28	27	50	65

CS8S (HX0158)

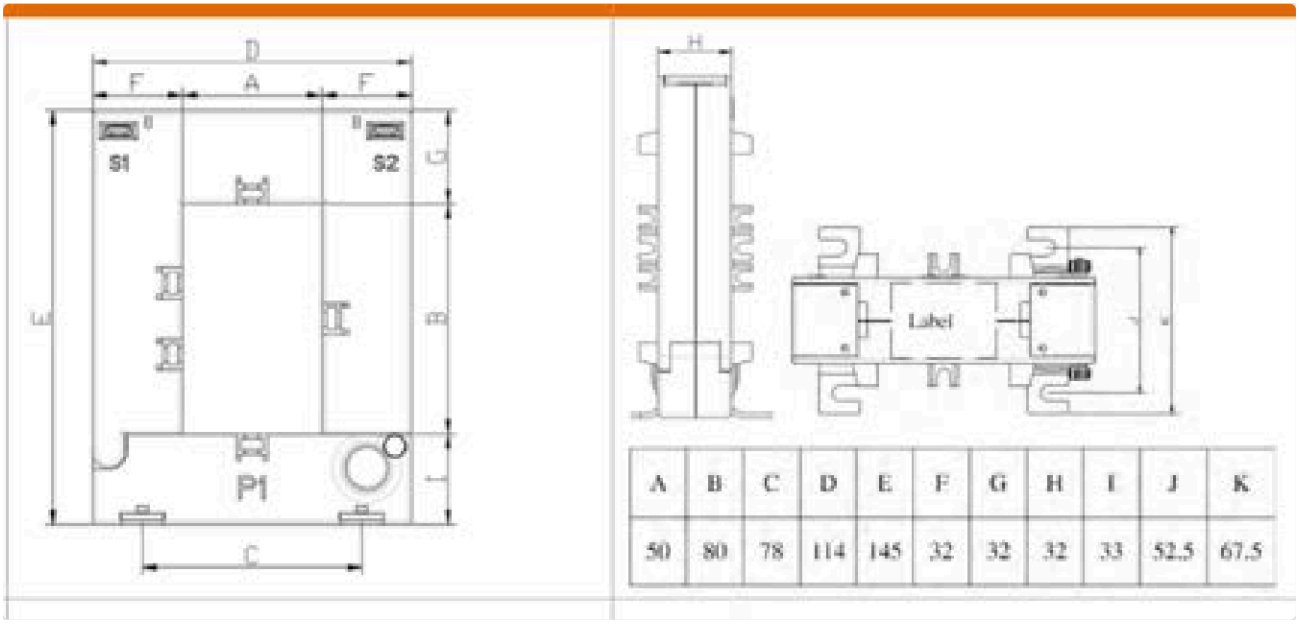

A	B	C	D	E	F	G	H	I	J	K
50	80	78	114	145	32	32	32	33	52.5	67.5

CT Dimensions (continued)

CS4S (HX0157)

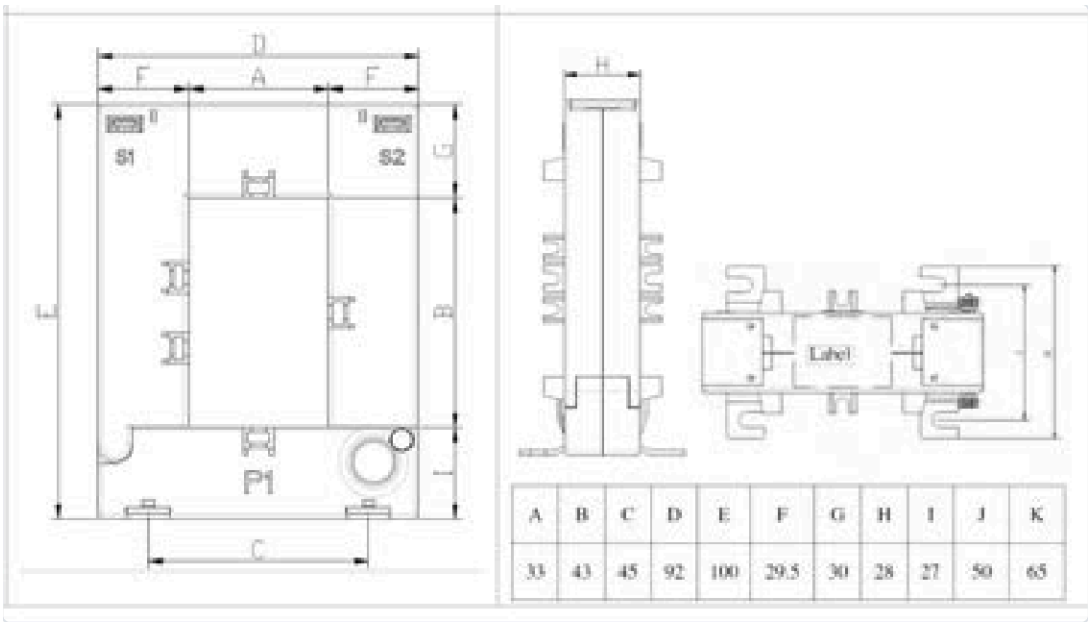

A	B	C	D	E	F	G	H	I	J	K
33	43	45	92	100	29.5	30	28	27	50	65

CS12S (HX0153)

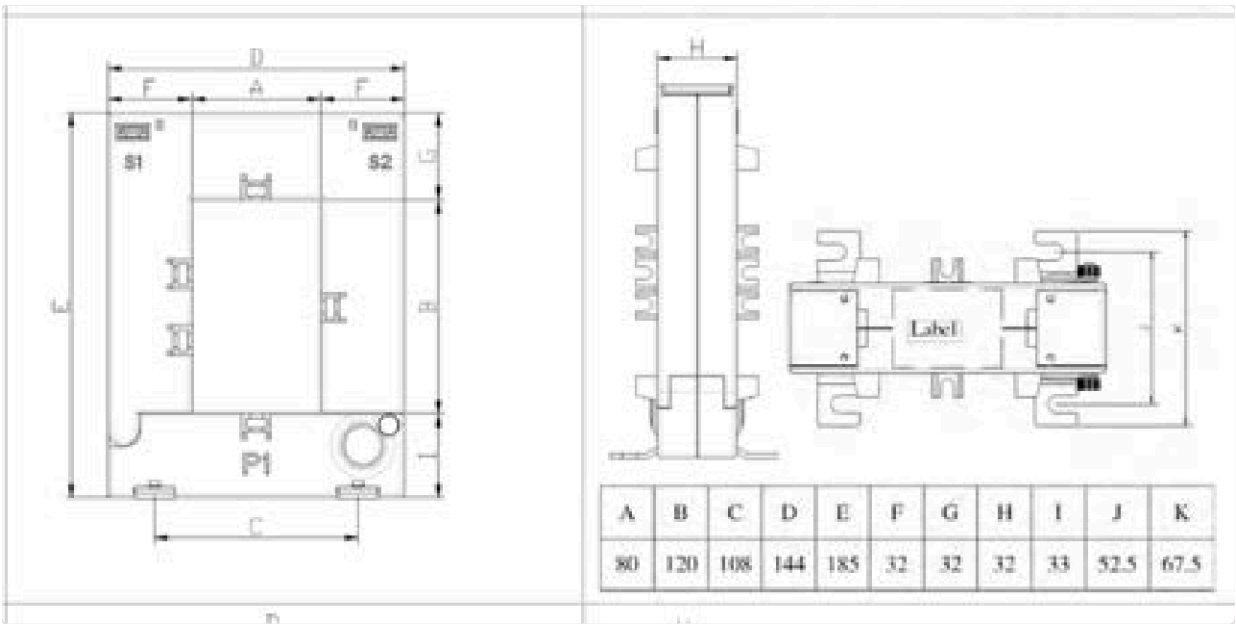

A	B	C	D	E	F	G	H	I	J	K
80	120	108	144	185	32	32	32	33	52.5	67.5

CT Dimensions (continued)

CS4L (EL0153)

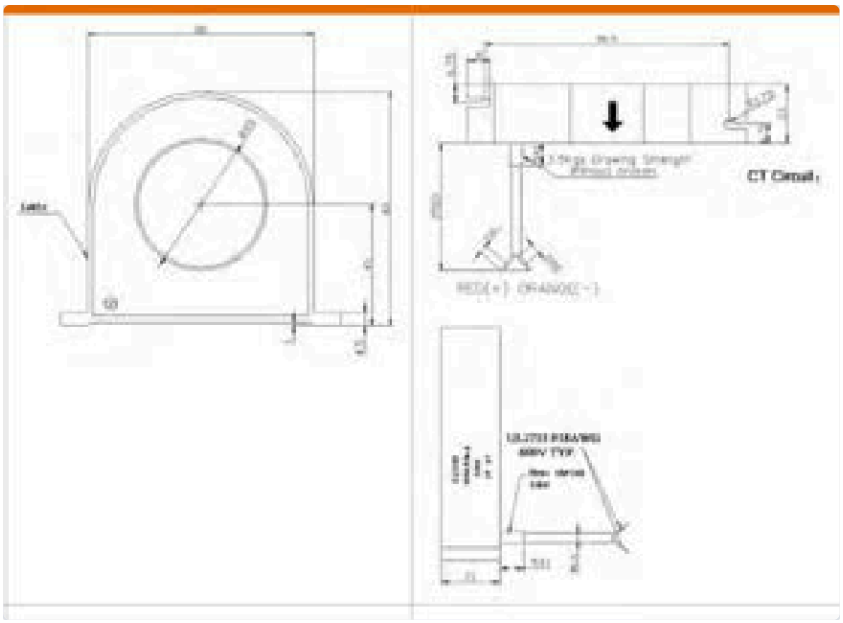

CS20S / CS30S (HX0154 / HX0155)

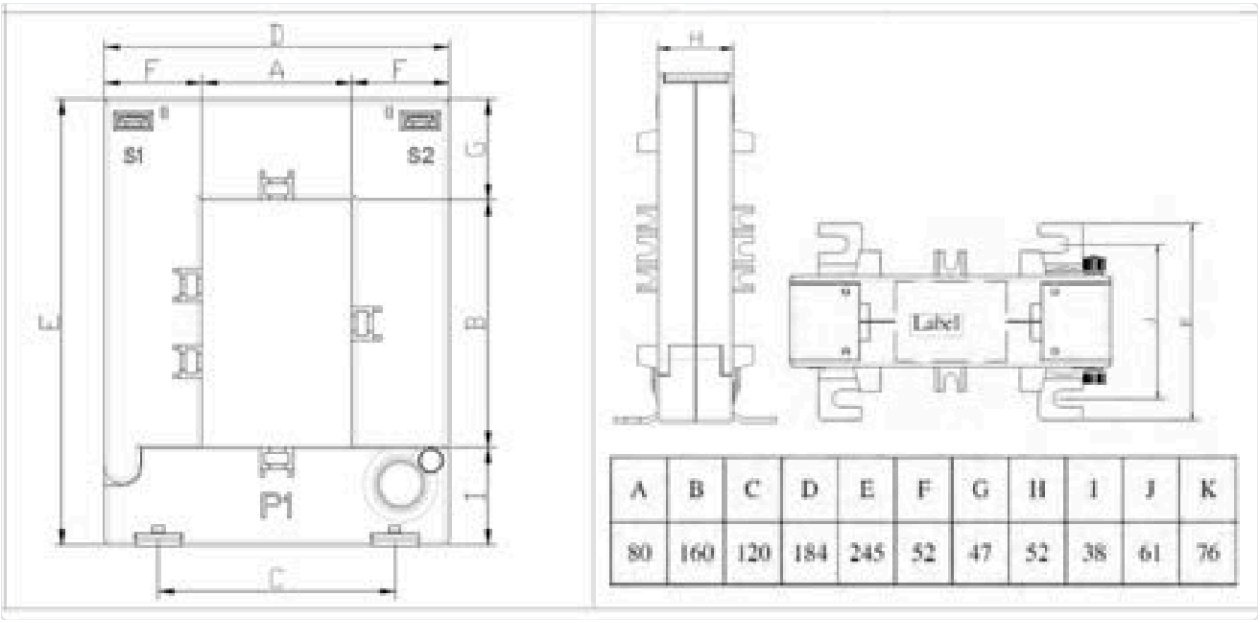

A	B	C	D	E	F	G	H	I	J	K
80	160	120	184	245	52	47	52	38	61	76

Ordering Information

How To Order

Each HACS sensor is ordered directly by its catalog number, as listed in the Model Range table on page 2 — there is no order-code builder to assemble, since current rating, window size, core type and accuracy are all fixed per model. Quote the model name and catalog number together (for example, “CS4S, HX0157”) when ordering or requesting a quotation.

Place An Order

To place an order or request a quotation for any HACS model, contact the SATEC Australia sales team, or scan the QR code.

PHONE +61 2 4774 2959
EMAIL sales@satec-global.com.au
ONLINE **satec-global.com.au/contact**

Document Revision History

VERSION	DATE
TBV1.1	**5 November 2026**